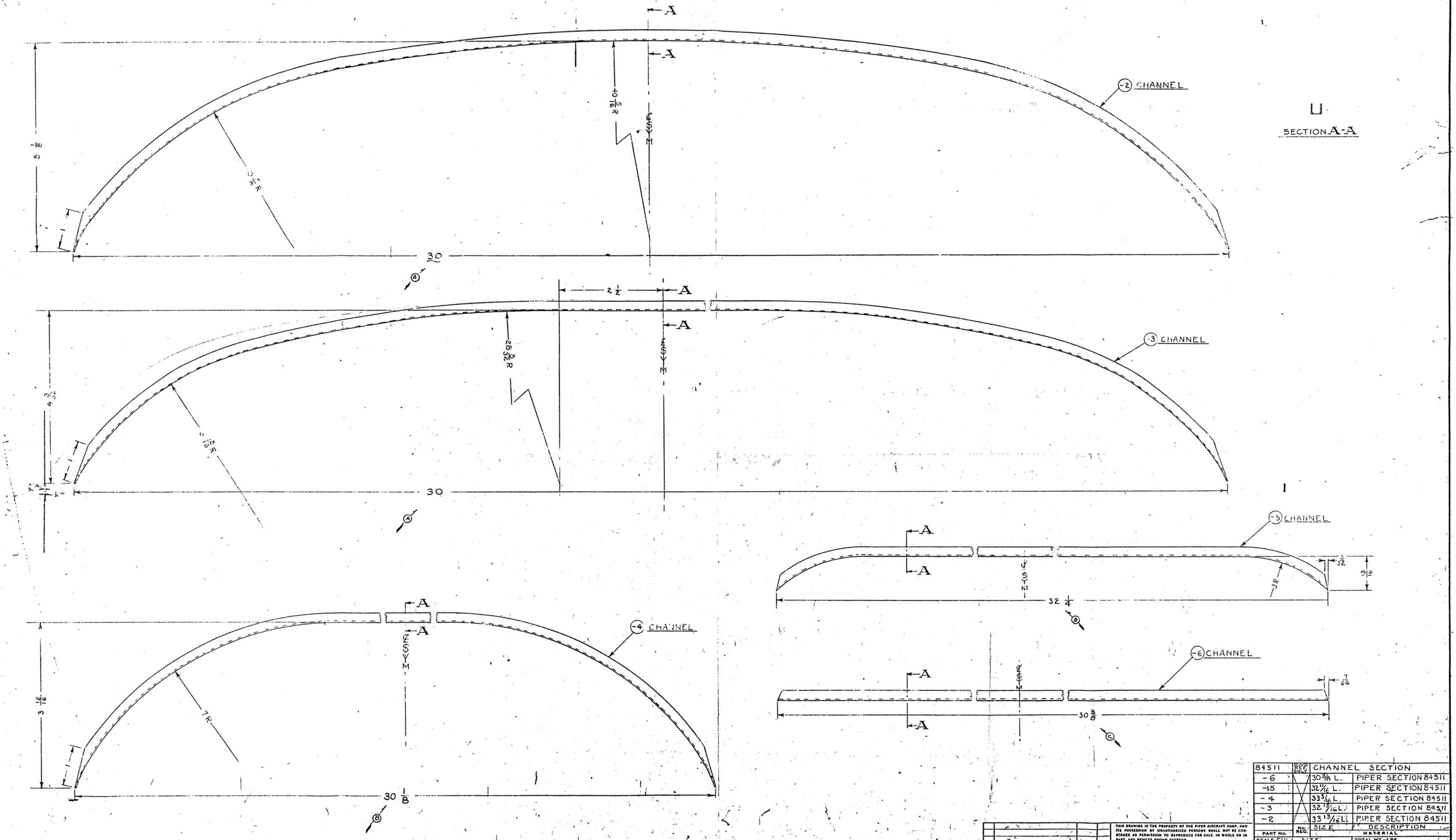
A
A
-2 CHANNEL
SECTION A-A
40 5/16 R
9 5/8 R
5 1/8
1
30
A
2 1/2
A
A
-3 CHANNEL
28 5/32 R
9 5/16 R
4 3/32
1
30
A
-5 CHANNEL
A
A
3/32
13/16
3 R
32 1/4
B
-4 CHANNEL
A
A
7 R
3 15/16
1
30 1/8
B
-6 CHANNEL
A
A
7/64
30 3/8
C

84511	DWG REF. ONLY	CHANNEL SECTION	
-6		30 3/8 L.	PIPER SECTION 84511
-15		32 11/16 L.	PIPER SECTION 84511
-4		33 5/16 L.	PIPER SECTION 84511
-3		32 15/16 L.	PIPER SECTION 84511
-2		33 13/16 L.	PIPER SECTION 84511
		SIZE	DESCRIPTION
PART No.	No. REQ.	MATERIAL	

SCALE FULL SIZE
TOTAL WT.–LBS.
FINISH–PIPER SPECIFICATION #10
MANUFACTURING PRACTICES–PIPER SPECIFICATION #9

LET	REVISION	DATE	BY
C	30 3/8 WAS 30 5/8 FOR -6	1-28-46	I.D.B.
B	30 3/4 WAS 29 F/R -4; 32 3/4 WAS 33 1/2 FOR -5	1-28-46	I.D.B.
A	30 WAS 27 7/16 FOR -2; 30 WAS 28 [illegible] FOR -3	1-28-47	D.B.

THIS DRAWING IS THE PROPERTY OF THE PIPER AIRCRAFT CORP. AND ITS POSSESSION BY UNAUTHORIZED PERSONS SHALL NOT BE CONSTRUED AS PERMISSION TO REPRODUCE FOR SALE, IN WHOLE OR IN PART, ANY DEVICES SHOWN THEREON.

MODEL	PER PLANE	NEXT ASSEMBLY	SUPERSEDES	SUP. BY
J5C	R.F. -4 L.F. -3,5,6	10250	52712	

PIPER AIRCRAFT CORP.
LOCK HAVEN, PENNA.

CHANNEL – HEADLINING

DRAFTSMAN	CHECKER	STANDARDS	
HMZ 11-6-45	R.A.T. 11-6-45		10253

PHILADELPHIA BLUE PRINT CO.